Nov. 27, 1962 W. R. TRITT 3,065,724

DECK AND HULL JOINT FOR BOATS

Filed May 12, 1959

FIG. 1.

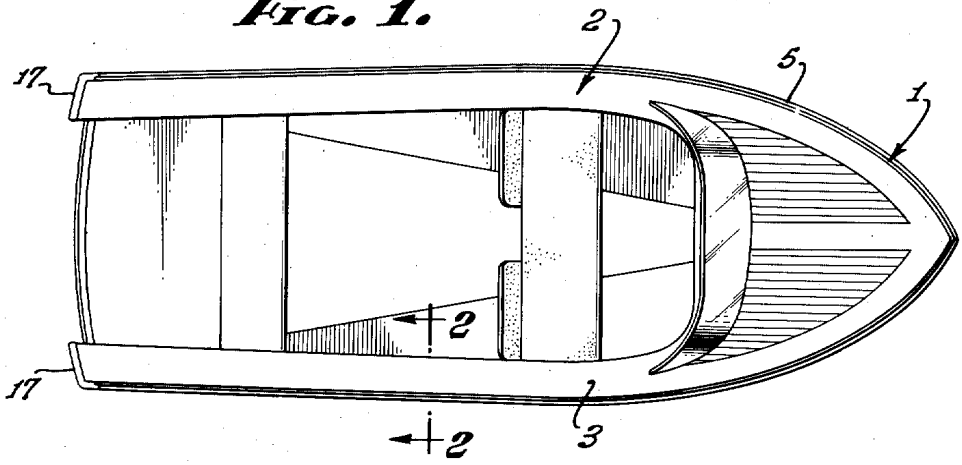

FIG. 2.

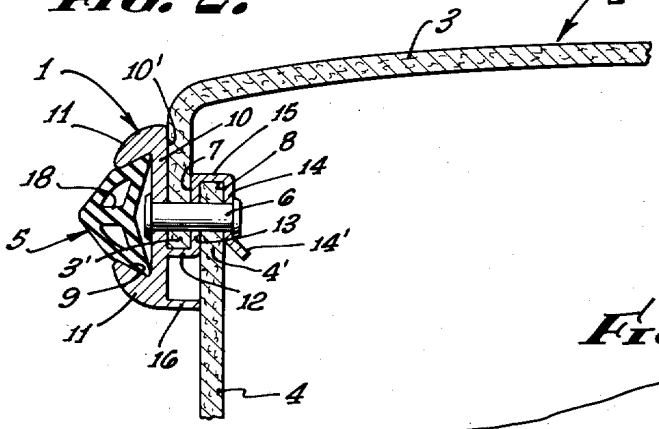

FIG. 3.

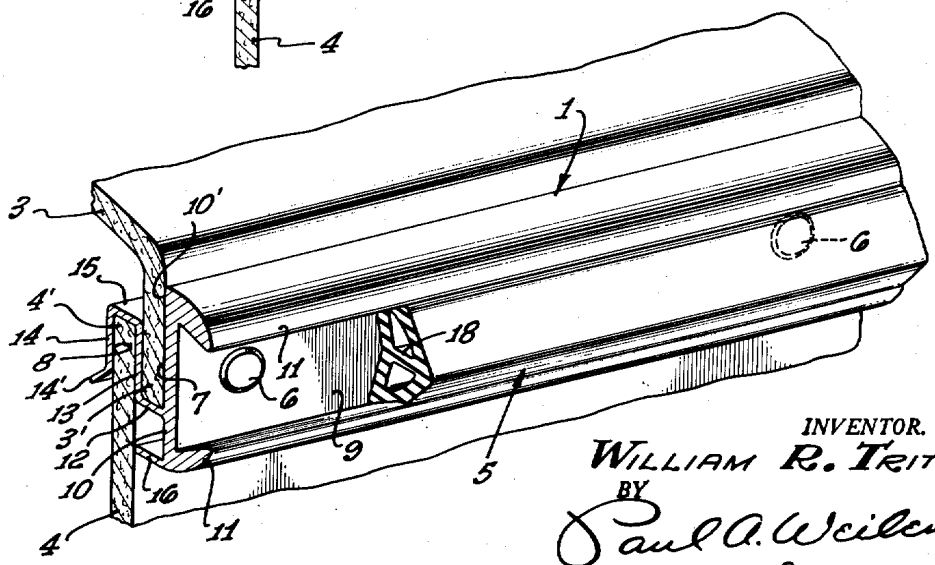

INVENTOR.
WILLIAM R. TRITT
BY
Paul A. Weilein
ATTORNEY.